Procedures to file a request to the JPO for Patent Prosecution Highway Pilot Program between the JPO and the CIPO

1. Request to the JPO

When an applicant files a request for an accelerated examination under the Patent Prosecution Highway Pilot Program to the Japan Patent Office (JPO), an applicant must submit the request form “The Explanation of Circumstances Concerning Accelerated Examination” based on the procedure prescribed in “the Guidelines of the Accelerated Examination and Appeal". (see http://www.jpo.go.jp/torikumi/t_torikumi/souki/pdf/v3souki/guideline.pdf “The Explanation of Circumstances Concerning Accelerated Examination” is described on pages 31-33.)

Under the Patent Prosecution Highway Pilot Program, an applicant is not required to fill in section 2 (the disclosure of prior arts and comparison between the claimed invention and the prior art) in “The Explanation of Circumstances Concerning Accelerated Examination”, if the application, filed to the JPO, satisfies the following conditions (1) and the applicant attaches the following documents (2) to “The Explanation of Circumstances Concerning Accelerated Examination”.

(1) Requirements for requesting an accelerated examination under the PPH pilot program at the JPO

(a) Both the JPO application on which PPH is requested and the CIPO application(s) forming the basis of the PPH request shall have the same earliest date (whether this be a priority date or a filing date). For example, the JPO application (including PCT national phase application) is either:

(Case I) an application which validly claims priority under the Paris Convention to the CIPO application(s) (examples are provided in ANNEX, Figure A, B, C and D), or

(Case II) an application which is the basis of a valid priority claim under the Paris Convention for the CIPO application(s) (including PCT national phase application(s)) (examples are provided in ANNEX, Figure E, F and G), or

(Case III) an application which shares a common priority document with the CIPO application(s) (including PCT national phase application(s)) (examples are provided in ANNEX, Figure H, I, J, K and L), or

(Case IV) a PCT national phase application where both the JPO application and the CIPO application(s) are derived from a common PCT international application having no priority claim (examples are provided in ANNEX, Figure M).

A JPO application, which validly claims priority to multiple CIPO or PCT applications, or which

is a divisional application validly based on the originally filed application that is included in (Case I) to (Case IV) above, is also eligible.

(b) At least one corresponding patent application exists in the CIPO which has one or more claims that have been determined to be patentable by the CIPO.

The claims determined to be patentable are

(i) claims which are determined to be patentable by the “Notice of Allowance”, or

(ii) claims clearly identified to be patentable in the latest office action (“Examiner’s Report” or “Final Action Report”)”.

“Corresponding patent application” should not be necessarily interpreted as the application which forms the basis of the priority, but might be the application which derived from the application which forms the basis of the priority or the PCT application which has no priority claim; e.g., a divisional application of the application or an application which claims internal priority to the application.

(c) All claims on file, as originally filed or as amended, for examination under the PPH must sufficiently correspond to one or more of those claims indicated as allowable in the CIPO.

Claims are considered to "sufficiently correspond" where, accounting for differences due to translations and claim format, the claims in the JPO are of the same or similar scope as the claims in the CIPO, or the claims in the JPO are narrower in scope than the claims in the CIPO.

In this regard, a claim that is narrower in scope occurs when a CIPO claim is amended to be further limited by an additional feature that is supported in the specification (description and/or claims).

A claim in the JPO which introduces a new/different category of claims to those claims indicated as allowable in the CIPO is not considered to sufficiently correspond. For example, where the CIPO claims only contain claims to a process of manufacturing a product, then the claims in the JPO are not considered to sufficiently correspond if the JPO claims introduce product claims that are dependent on the corresponding process claims.

It is noted that when claims have been determined to be patentable by the CIPO after making amendments to the claims, the claims filed to the JPO must usually be amended in a similar way to sufficiently correspond to the allowable/patentable claims in the CIPO application.

(d) The JPO has not begun examination of the patent application.

(2) Documents to be submitted

Documents (a) to (d) below[1] must be submitted by attaching them to "The Explanation of Circumstances Concerning Accelerated Examination". It is noted that even when it is not needed to submit the documents mentioned below, the name of the documents must be listed in "The Explanation of Circumstances Concerning Accelerated Examination". Please refer to the Example Form below for a more detailed guidance.

(a) Copies of all office actions[2] from the CIPO, which were sent in regard to the corresponding patent application filed to the CIPO, and translations of these office actions[3].

An applicant has to submit Japanese or English translations of all office actions from the CIPO if those documents are written in French. On the other hand, an applicant does not have to submit translations if they are written in English.

(b) Copies of all claims determined to be patentable by the CIPO, and translations of them[3].

The Copies of the claims determined to be patentable in the CIPO might be either copies of the written amendments, the documents submitted at filing which includes claims determined to be patentable, or copies of the CIPO's publication of the granted patent. The descriptions above in requirement (2)(a) regarding translations also apply to this requirement (2)(b).

(c) Copies of references cited by the CIPO examiner

If the references are patent documents, the applicant is not required to submit them, because the JPO usually possesses them. If the JPO does not possess such a patent document, the applicant must submit the patent document at the JPO examiner's request. Non-patent literature must always be submitted.

It is unnecessary to submit translations of the references or to submit the documents which are listed as references of interest defined in the 15.05.02 in the MOPOP.

(d) Claim correspondence table

Applicants must submit a claim correspondence table which indicates how all claims in the JPO application sufficiently correspond to the claims determined to be patentable by the

---

[1] An applicant can request an electronic copy of the documents (a) and (b) from the Client Service Center in the CIPO. For the detail, please access to the CIPO's website; http://www.ic.gc.ca/eic/site/cipointernet-internetopic.nsf/eng/wr00827.html

[2] Office actions are documents which relate to substantive patent examination, such as Examiner's Report, Final Action Report and Notice of Allowance..

[3] Machine translations are admissible, but if it is impossible for the examiner to understand the outline of the translated office action(s) or the patent claim(s), due to insufficient translation, the JPO examiner can request the applicant to resubmit translations.

CIPO.

When claims are just literal translation, the applicant can just write down that “they are the same” in the table. When claims are not just literal translation, it is necessary to explain the sufficient correspondence of each claim based on the criteria (1) (c). Please refer to the Example Form below.

When an applicant has already submitted the above mentioned documents (a) to (d) to the JPO, through simultaneous or past procedures, the applicant may incorporate the documents by reference and is thus not required to attach the documents.

If the application does not fulfill the requirements (1) and (2) above, the applicant cannot omit to fill in section 2 (the disclosure of prior arts and comparison between the claimed invention and prior art) and the request for accelerated examination will not be accepted. In that case, the JPO will notify the applicant (or the representative) hereof and inform of the reasons why accelerated examination is denied.

2. Way to fill out the request form “The Explanation of Circumstances Concerning Accelerated Examination” when requesting accelerated examination at the JPO under the PPH pilot program

(1) Circumstances

Please indicate the relationship between the JPO application on which PPH is requested and the corresponding CIPO application(s) from the aspect of the above Requirement 1.(1)a), and state that an accelerated examination is requested under the PPH program. The application number(s) of the corresponding CIPO application(s) must be specified. If the application requested for the PPH or the corresponding CIPO application(s) is a derived application (e.g., the CIPO application that is indicated to be allowable/patentable is a divisional application of a CIPO application which forms the basis of the priority claim of the JPO application), please indicate the application number of its basic application.

(2) Documents to be submitted

The applicant must list all required documents mentioned above in requirement 1(2) (a) to (d) in an identifiable way, even when the applicant is allowed to omit the submission of certain documents according to these requirements 1(2) (a) to (d).

(3) Notice

The forms for “The Explanation of Circumstances Concerning Accelerated Examination” are

different depending on if the applicant makes use of the on-line filing procedure or of the paper filing procedure. Please refer to the available application forms: “Form 1 for Accelerated Examination” for on-line procedures and “Form 2 for Accelerated Examination” for paper procedures. (see http://www.jpo.go.jp/torikumi/t_torikumi/souki/pdf/v3souki/guideline.pdf “Form 1 for Accelerated Examination” is described on page 31 and “Form 2 for Accelerated Examination” is described on pages 32-33).

Example Form for the on-line PPH filing procedure

【書類名】　早期審査に関する事情説明書

The name of this paper

【提出日】　平成00年00月00日

Date of filing

【あて先】　特許庁長官殿

Destination

【事件の表示】
　【出願番号】　特願 0000－000000

Application number

【提出者】
　【識別番号】　000000000
　【住所又は居所】　〇〇県〇〇市〇丁目
　【氏名又は名称】　〇〇〇〇〇

The name and address of the submitter

【代理人】
　【識別番号】　000000000
　【住所又は居所】　〇〇県〇〇市〇丁目
　【氏名又は名称】　〇〇　〇〇

The name and address of the attorney

Bibliographical items

【早期審査に関する事情説明】

The explanation of circumstances concerning accelerated examination

1．事情
　本出願とカナダ特許庁への対応出願（特許出願番号0000000）は、共に、米国特許商標庁への一つの出願（出願番号00/000000）に対してパリ条約に基づく優先権を有効に主張する出願であり、特許審査ハイウェイ試行プログラムに基づく早期審査の申請を行うものである。

1. Circumstances
Both this application and the corresponding CIPO application (the application number is 0000000) validly claim priority under the Paris Convention to a USPTO application (the application number is 00/000000), and the accelerated examination is requested under the PPH program.

　以下において、「引用非特許文献1」とは、「村岡洋一著、「コンピュータサイエンス大学講座（第 11 巻）コンピュータ・アーキテクチャ」、第 2 版、株式会社近代科学者、1985 年 11 月、p. 123 – 127」である。

In what follows, “non-patent literature1” is “Yoichi Muraoka, Lecture of Computer Science (vol.11) computer architecture, 2nd edition, Scientist com, Nov. 1985, p.123-127.”

If the name of the document is long (over 50 letters), it is impossible to write it down directly to the column “【物件名】”. In this case, please write down the full name of the document in the column “【早期審査に関する事情説明】” and name it properly. Then write the name in the column “【物件名】”.

【提出物件の目録】

The list of submitted documents

List up the documents to be submitted

【物件名】 カナダ出願と本出願の請求項の対応関係を示す書面　1
【物件名】 **年**月**日付の対応カナダ出願に対する拒絶理由通知(Examiner's Report)の写し　1
【物件名】 **年**月**日付の対応カナダ出願に対する特許査定(Notice of Allowance)の写し　1
【物件名】 対応カナダ出願の特許公報であるカナダ特許第OOOOO号公報　1
【物件名】 対応カナダ出願に対して引用された米国特許第OOOOO号明細書　1
【物件名】 対応カナダ出願に対して引用された日本国特許第OOOOO号公報　1
【物件名】 引用非特許文献1　1

(The name of the document) The table explaining how the claims indicated as allowable by the CIPO sufficiently correspond to the claims in the JPO application　1

(The name of the document) Copy of the Examiner's Report from the CIPO of (date)　1

(The name of the document) Copy of the Notice of Allowance by the CIPO of (date)　1

(The name of the document) The publication of the CIPO corresponding application: Canadian Patent number 0000000　1

(The name of the document) Cited reference of the corresponding CIPO application: US 0000000 A　1

(The name of the document) Cited reference of the corresponding CIPO application: JP 0000000 A　1

(The name of the document) Cited non patent literature　1

Use the same name as in"【物件名】" under "【提出物件の目録】."

【添付物件】

The list of attached documents

【物件名】 カナダ出願と本出願の請求項の対応関係を示す書面

The table explaining how the claims indicated as allowable by the CIPO sufficiently correspond to the claims in the JPO application

Attach the document here as image file or text.

【内容】

本出願の請求項 The claim filed to the JPO	カナダで特許可能とされた請求項 The claim determined to be patentable in the CIPO	対応関係に関するコメント Comments about the correspondence
1	1	両クレームは同一である。 Both claims are the same.
2	2	〃
3	1	両クレームは、記載形式を除き同一である。 Both claims are the same except the claim format.
4	2	〃
5	1	請求項５は、カナダの請求項１にＡという構成を付加したものである。 Claim 5 in the JPO application adds composition A to claim 1 filed at the CIPO

【物件名】引用非特許文献1

Non-patent literature1

Use the same name as in “【物件名】” under “【提出物件の目録】.”

【内容】

Attach the copy of the document.

Annex

A

(Case I)
- Paris route -

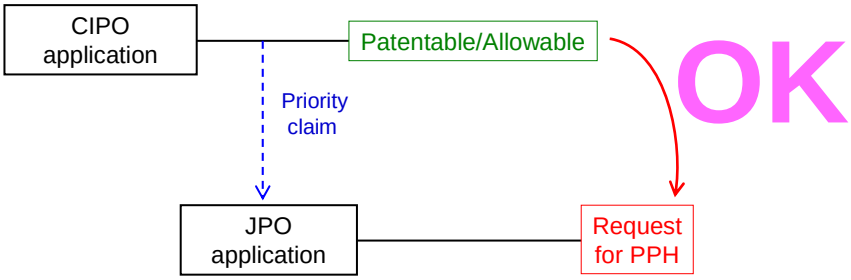

B

(Case I)
- PCT route -

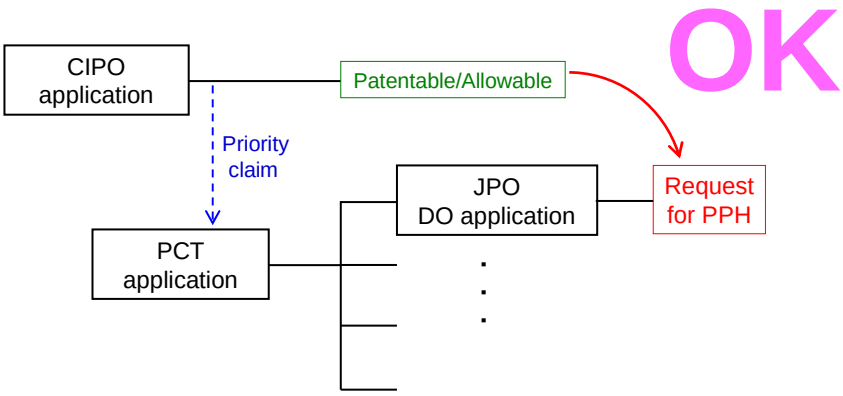

C

(Case I)

- Paris route & Complex priority -

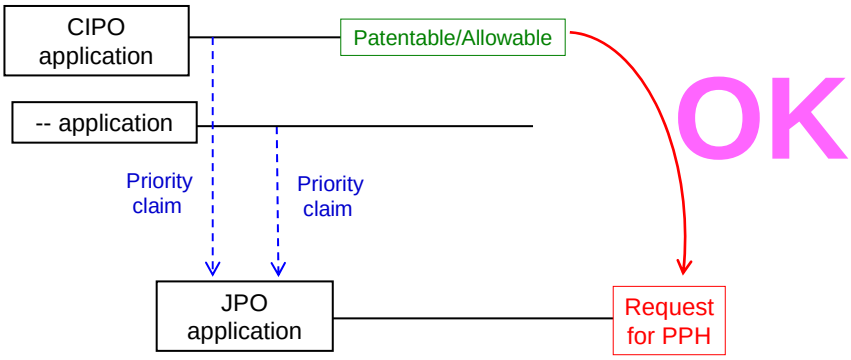

-- : any office

D

(Case I)

- Paris route & divisional application -

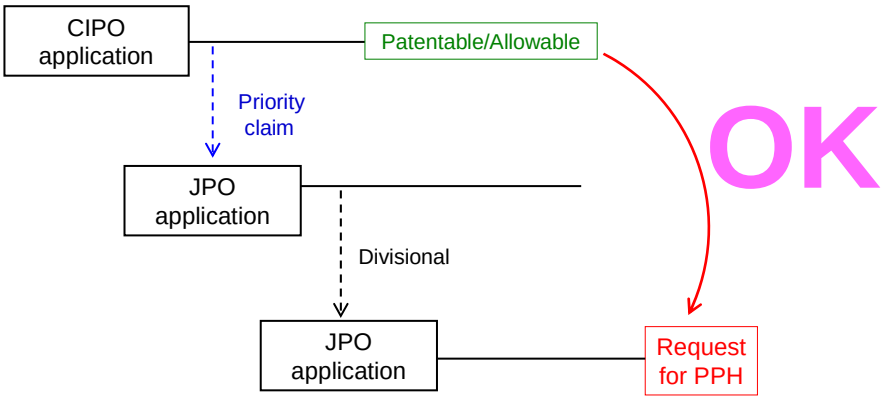

E

(Case II)
- Paris route -

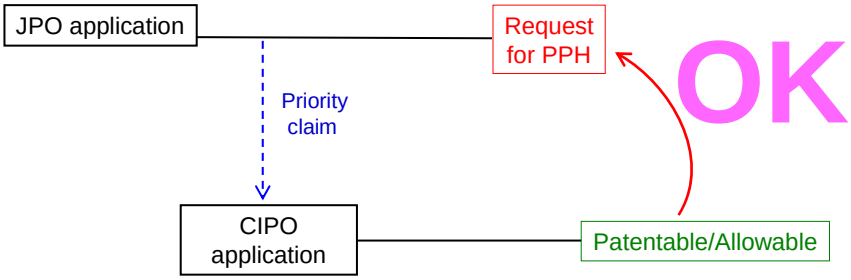

F

(Case II)
- PCT route -

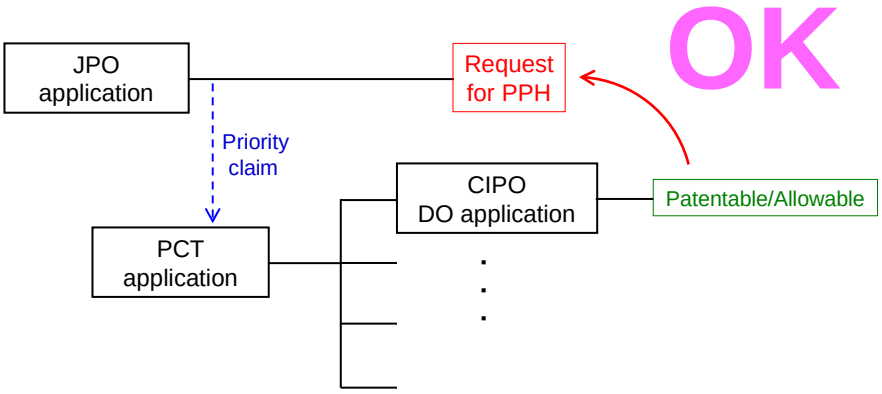

G

(Case II)
- Paris route & Complex priority -

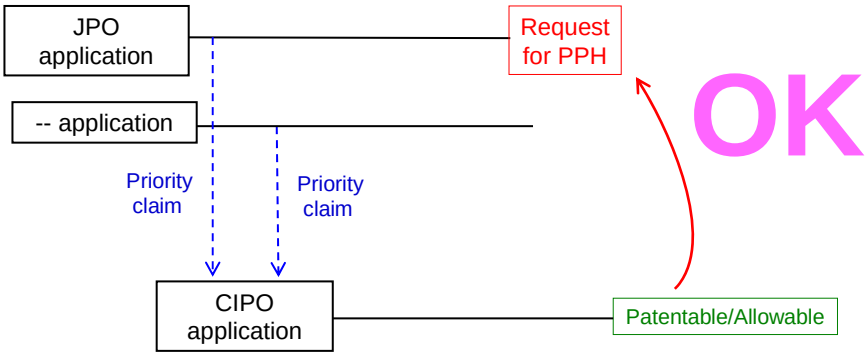

-- : any office

H

(Case III)

- Paris route, Internal priority -

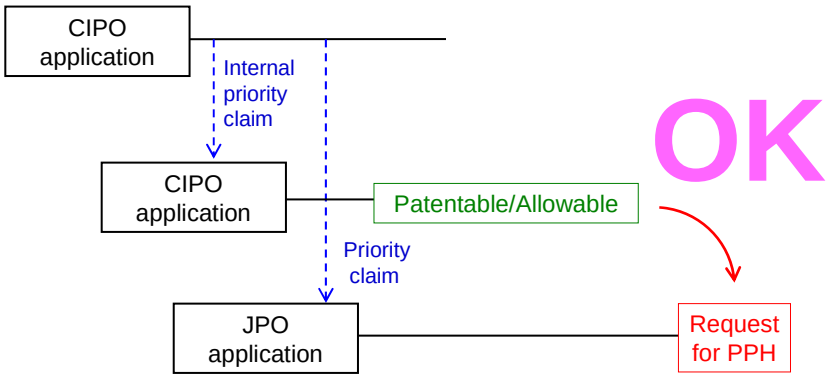

I

(Case III)

- Paris route, but the first application is from the third country -

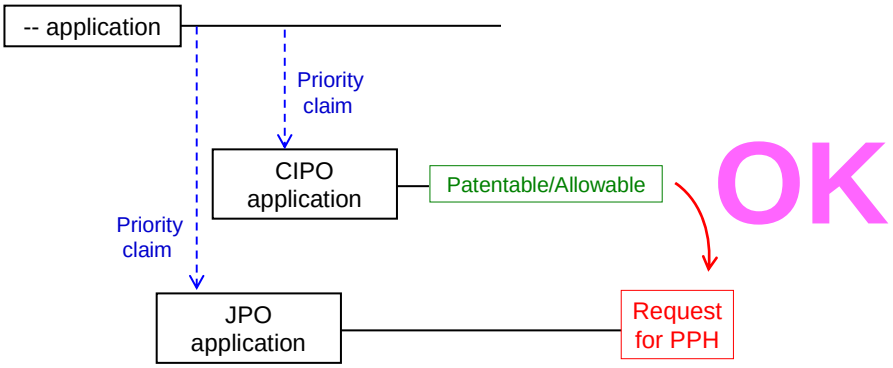

-- : the office other than the JPO and the CIPO

J

(Case III)

- PCT route, but the first application is from the third country -

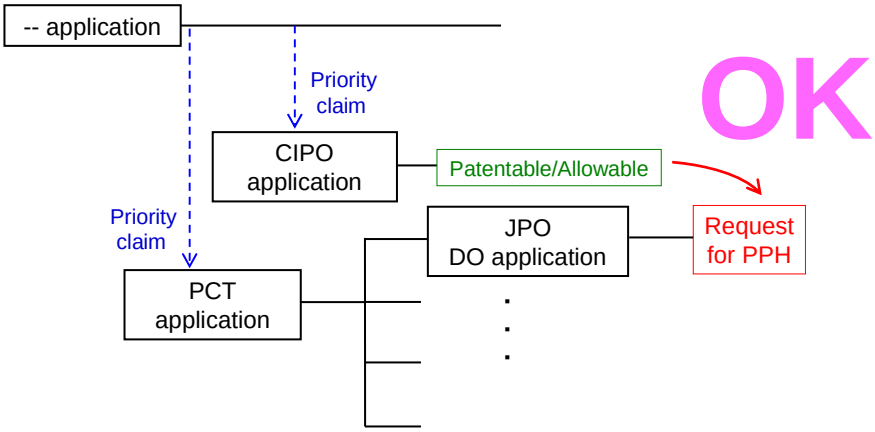

-- : the office other than the JPO and the CIPO

K

(Case III)
- PCT route -

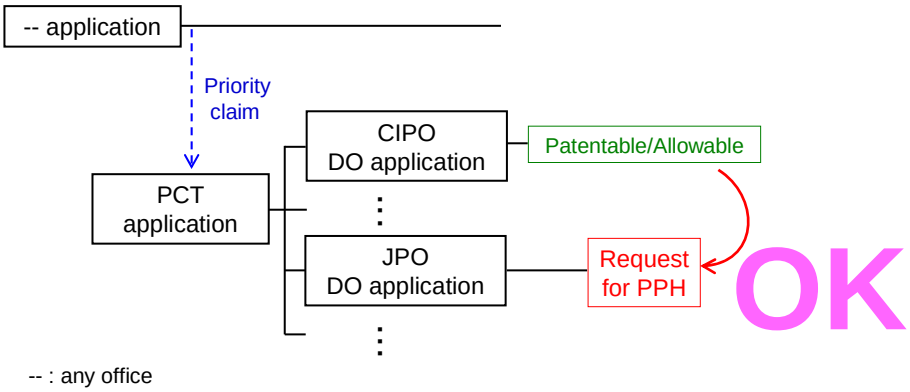

L

(Case III)
- Direct PCT & PCT route -

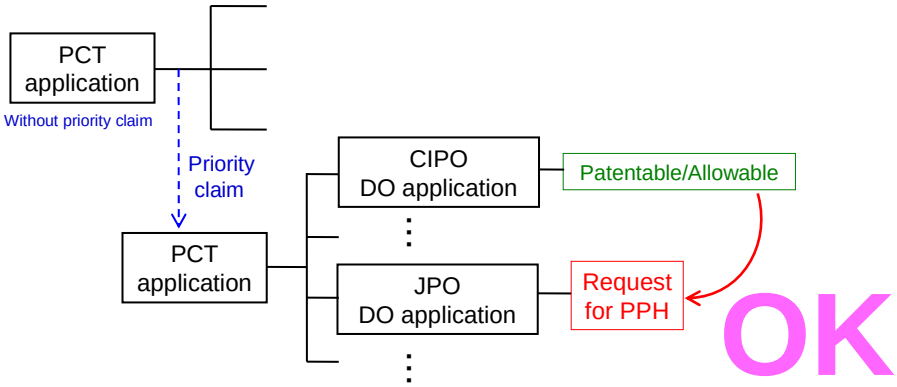

Annex

M

(Case IV)
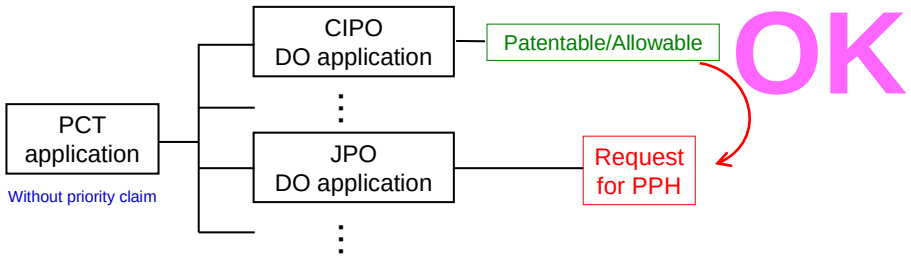
- Direct PCT route -